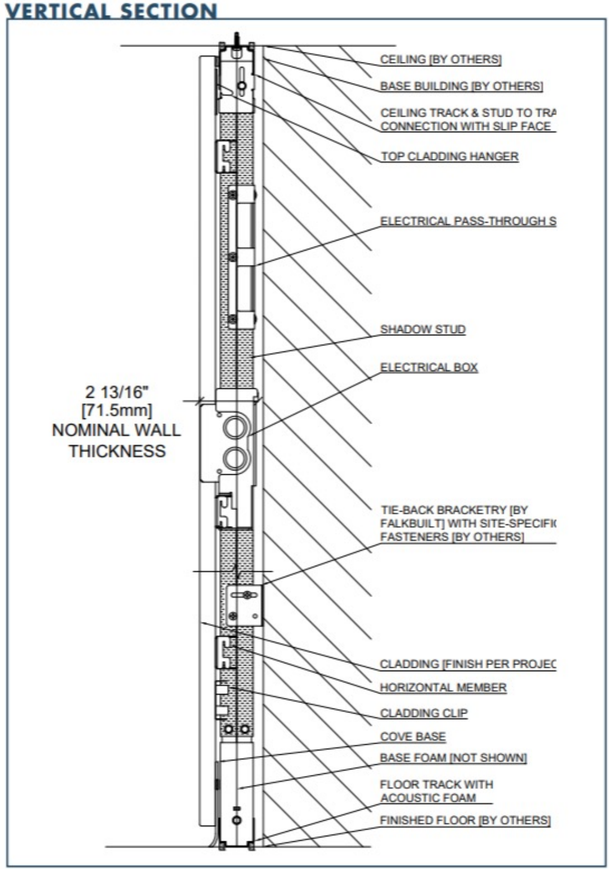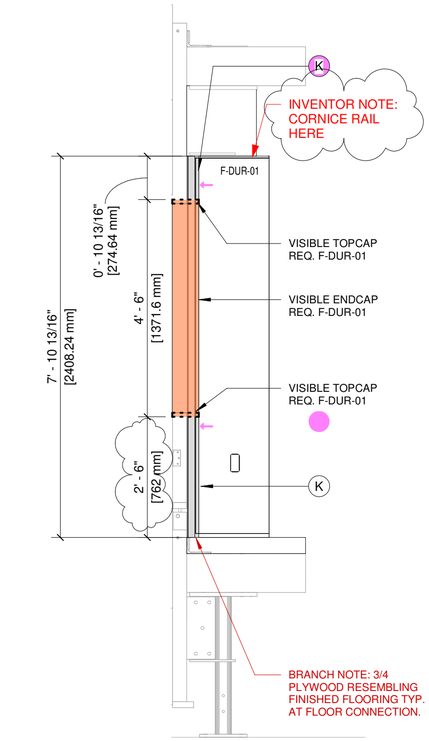VERTICAL SECTION